Wood burning steel stove KRATKI TORA/M 8 kW Ø 150 quartz sinter NATURALI PIETRA DI SAVOIA GRIGIA BOCCIARDATA



SKU: TORA/M/Q/N/P/D/S/G EAN: 5903751228172

€1,799.06

Technical data

General data

Rated output (kW)	**8**
Heating power range (kW)	**do 11**
Heating efficiency (%)	**78**
Exhaust gas temperature (℃)	**300**
Max length of logs (cm)	**25**
Color	**Pietra di Savoia Grigia**
Self Closure	**No**
Door opening direction	**Right**
Materials	**Steel**
Flue outlet diameter (mm)	**150**
Air intake diameter (mm)	**100**

Energetic efficiency

Energy class	**A**
Energy efficiency index (EEI)	**103**
Seasonal Heating efficiency (%)	**68**
Thermal power for space heating (kW)	**8**
CO emissions (at 13% O 2) ≤ given in %	**0.1**
Dust emission (mg/Nm3)	**19**

Certifications / Compliance

Meets requirements	**Ecodesign**

Additional information

Design features	**Decorative glass**
Front type	**Steel front with ceramic glass**
Type of fuel	**Seasoned deciduous wood (humidity ≤20%)**
EAN	**5903751228172**

Physical parameters

Width (cm)	**43.5**
Height (cm)	**144.3**
Depth (cm)	**43.5**
Weight (kg)	**183**

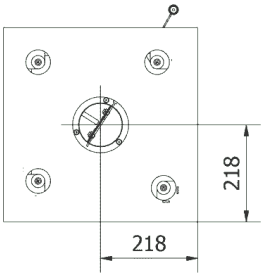
218
218

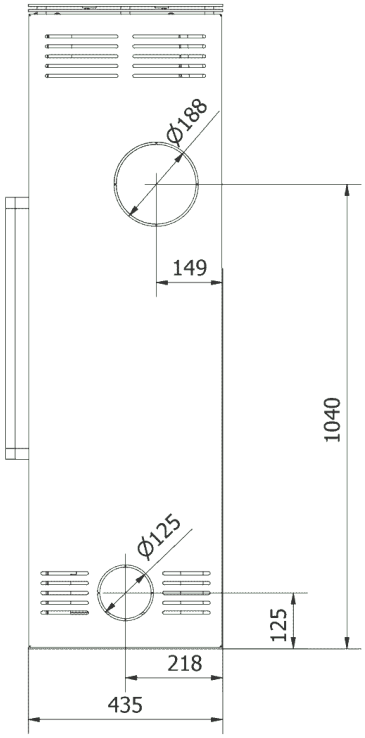
Ø188
149
1040
Ø125
125
218
435

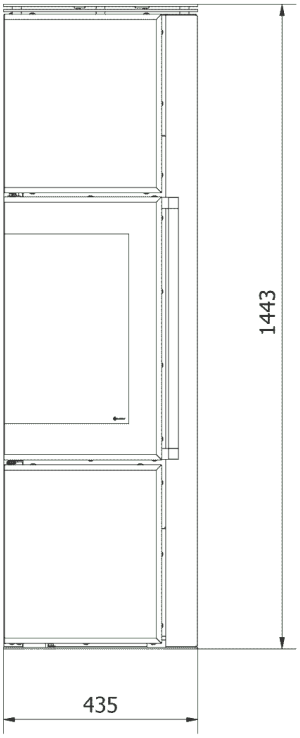
1443
435

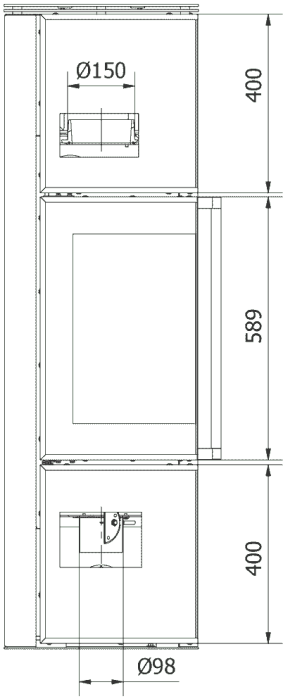
Ø150
400
589
400
Ø98

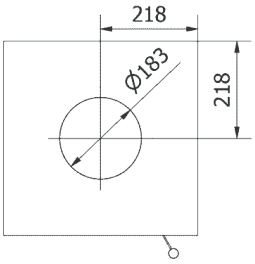
218
Ø183
218